AK36

PHOTOELECTRIC ROTARY ENCODER

SSI protocol · Absolute Encoder · High Resolutions · Multiturn Encoder · BiSS protocol

Absolute rotary encoder AK36 uses photoelectric technology and is available in singleturn and multiturn versions. Using SSI or BiSS serial interface, it can reach up to 21 bit singleturn and 40 bit multiturn resolutions per revolution.

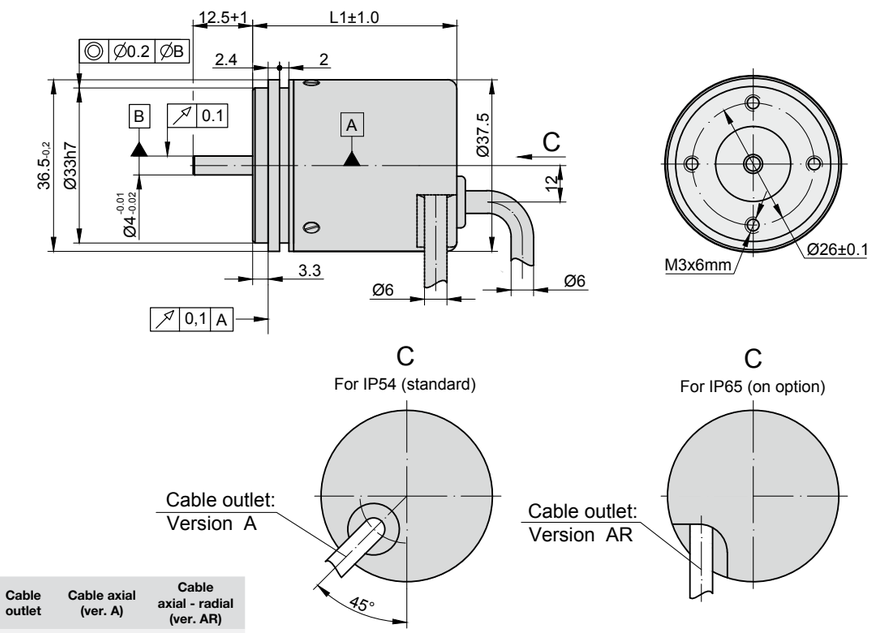

	Cable outlet	Cable axial (ver. A)	Cable axial - radial (ver. AR)
Singleturn	L1	39	39
Multiturn	L1	55	60

MECHANICAL DATA

Maximum shaft speed	10000 rpm
Maximum shaft load: - axial - radial (at shaft end)	 5N 10N
Starting torque at 20°C	≤ 0.002 Nm
Rotor moment of inertia	< 2 gcm²
Protection (IEC 529) - Standard - Optional	 IP54 IP64
Maximum weight without cable	0.1 kg

Operating temperature: - singleturn version - multiturn version	 -20...+80 °C -10...+70 °C
Storage temperature: - singleturn version - multiturn version	 -30...+90 °C -20...+80 °C
Maximum humidity (non-condensing)	98 %
Permissible vibration (55 to 2000 Hz)	≤ 100 m/s²
Permissible shock (11 ms)	≤ 300 m/s²

ELECTRICAL DATA

Resolution:	
Singleturn version:	
- with interface BiSS C	9... 21 bit
- with interface SSI	9... 21 bit
Multiturn version:	
- single turn resolution with BiSS C	9... 21 bit
- multiturn resolution with BiSS C	12/16/20/24 bit
- single turn resolution with SSI	9 ... 21 bit
- multiturn resolution with SSI	9 ... 40 bit
Output code	Gray, binary
Data interface	SSI, BiSS C

Accuracy	± 30 arc sec
Supply voltage	+5V ± 5%
Light source	LED
Maximum operating frequency: - with interface BiSS C - with interface SSI	 10 MHz 4 MHz
Cable length (standard)	1 m
Standard cable length	1 m, without connector
Maximum cable length	25 m

BiSS C serial interface

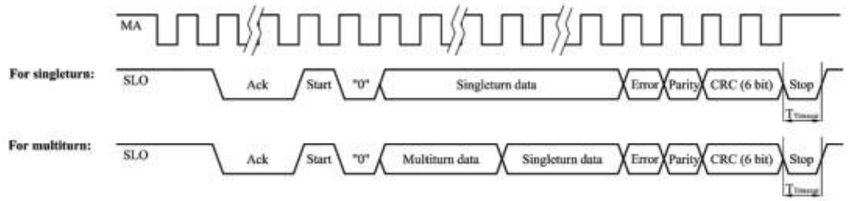

SSI serial interface

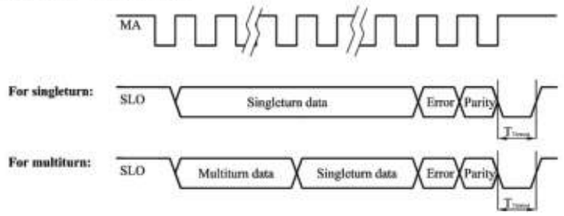

Interface	*BISS C*
$T_{Timeout}$	1,2 µs - 26 µs
Clock frequency	62,5 kHz - 10 MHz

Interface	*SSI*
$T_{Timeout}$	1,2 µs - 26 µs
Clock frequency	62,5 kHz - 4 MHz

Note:

1. Error and parity bits should be determinated during order.

ACCESSORIES

CONNECTORS FOR CABLE	C9 9-pin round connector	C12 12-pin round connector	D9 9-pin flat connector
COUPLING		SC30	

ORDER FORM

AK36 - XX - X - XX/XX - X - XX/XX - X

VERSIONS:	OUTPUT SIGNALS INTERFACE (SERIAL):	SINGLETURN BIT NUMBER*:	MULTITURN BIT NUMBER*:	OUTPUT CODE:	CABLE LENGTH:	CONNECTOR TYPE:	COUPLING:
ST - singleturn MT -multiturn	S - SSI B -BiSS C	B9 - 9 B10 -10 B11 - 11 B12 - 12 ...-... B20 -20 B21 - 21	M0 - 0 (for singleturn version) M9 - 9 M10 -10 M11 - 11 M12 - 12 ...-... M40 -40	B -Binary G - Gray	A01 - 1m (A - axial cable) A02 - 2m ...-... AR 01 - 1m (AR- universal cable outlet) AR02 - 2m AR03 - 3m ...-...	W - without connector C9 -round, 9 pins C12 - round, 12 pins D9 - flat, 9 pins RS10 - round, 10 pins ONC - round, 10 pi	0 - without coupling 1 - with coupling

* See electrical data for possible bit selection with specific interface

ORDER EXAMPLES:	1) AK36-ST-S-B9/M0-B-AR02/W-0 2) AK36-MT-B-B20/M12-G-AR01/C12-1